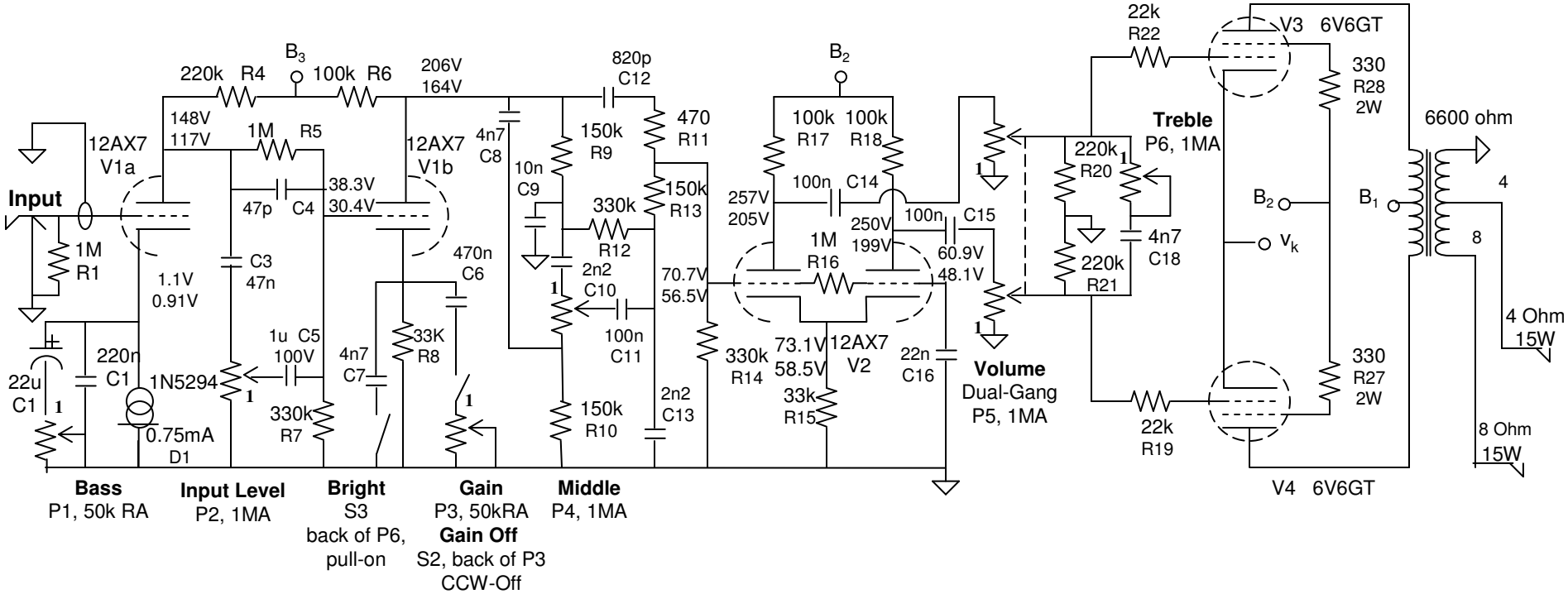

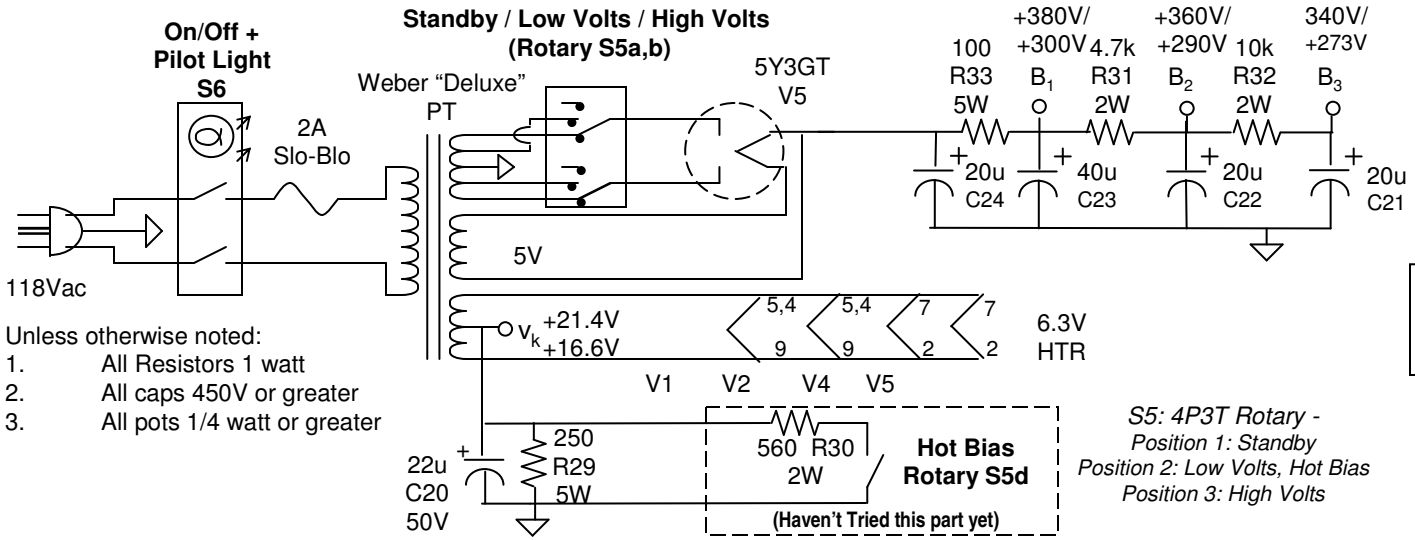

Unless otherwise noted:

1. All Resistors 1 watt
2. All caps 450V or greater
3. All pots 1/4 watt or greater

S5: 4P3T Rotary -
Position 1: Standby
Position 2: Low Volts, Hot Bias
Position 3: High Volts

Melissa
2.1a